DOSTEC50 - PULSE EMITTER ASSEMBLY

D50 102

1

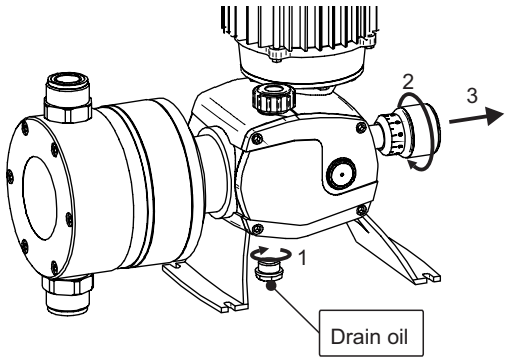

2

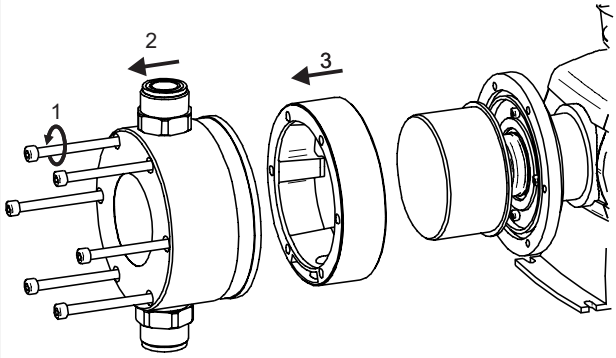

3

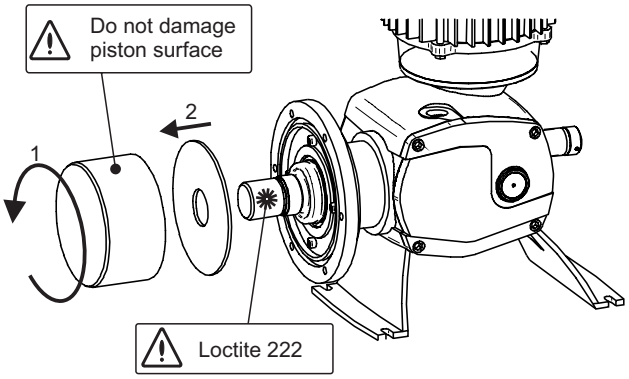

4

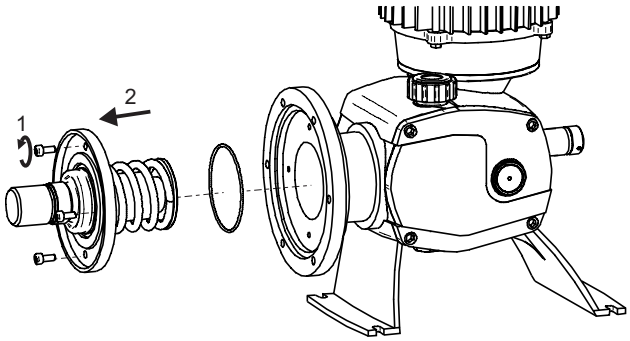

5

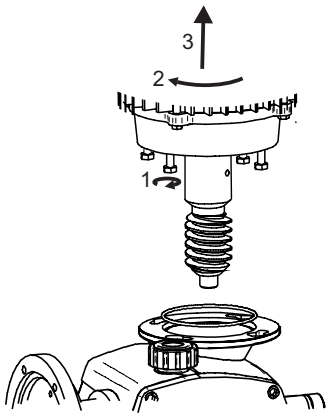

6

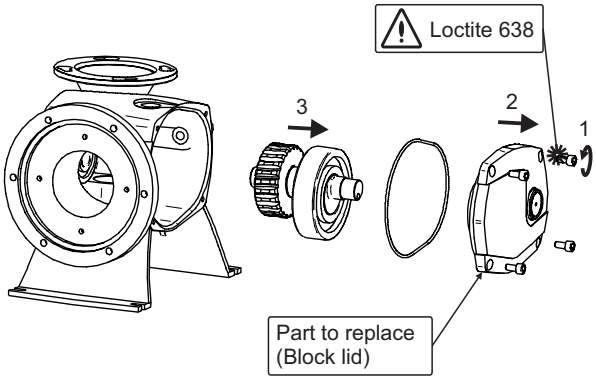

7

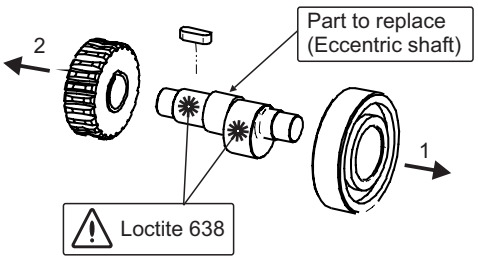

Replace and install the new parts folowing the same steps.
Do not forget the LOCTITE

8

1rst Check
1-Connect the tester.
2-Manually turn the fan.
3-One pulse every12 turns
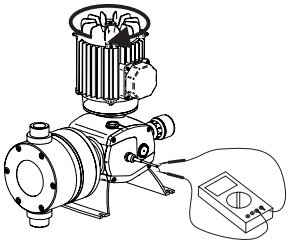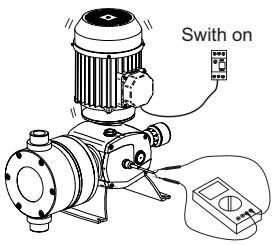
2nd Check
1-Connect the tester.
2-Swith on the pump
3-Pulse “on-off”